SJT-ZPC-V2A(VM1) Safety Board

(Advance Open door & Re-leveling Safety Circuit and Unintended Car Movement detection device)



Content

Content....1
1 Foreword....2
2 Attention....2
3 Usage....3
3.1 Configuration....3
3.2 System Application Composition....3
3.3 Dimension....4
3.4 Terminal and Connection....5
3.5 Circuit Schematic Diagram....5
3.6 Installation of Sensor....7
3.7 Function description....8
4 Maintenance....10
5 Warranty....11

1 Foreword

This product SJT-ZPC-V2A(VM1) met EN81-20/50 electric component safety circuit regulation. Re-leveling & Advance Open Door function can be achieved by detecting Up & Down re-leveling zone signals at effective area (Unlocking zone), and cooperating w

3 Usage

3.1 Configuration

Chart 1 Product configuration of detection Subsystem

Subsystem Model	SJT-ZPC-V2A(VM1)
Hardware Version	V2A(VM1)

3.4 Terminal and Connection

Chart 2 Terminal Definition

Port	Position	Definition	Type	Rated capacity
JP1	JP1-1	DC24V+	Power	400mA
	JP1-2	0V		
	JP1-3	Up re-leveling door zone	Input	DC24V, 40mA
	JP1-4	Down re-leveling door zone	Input	DC24V, 40mA
	JP1-5	Re-leveling door short input	Input	DC24V, 40mA
	JP1-6	Re-leveling condition output	Contact output	DC24V, <5A
	JP1-7	Re-leveling condition output common		
	JP1-8	Re-leveling door zone output	Contact output	DC24V, <5A
	JP1-9	Re-leveling door zone output common		
	JP1-10	Door short and UCMP output 1	Contact output	AC110V, <5A
	JP1-11	Door short and UCMP output 1		
	JP1-12	UCMP output 2	Contact output	AC250V, <5A DC24V

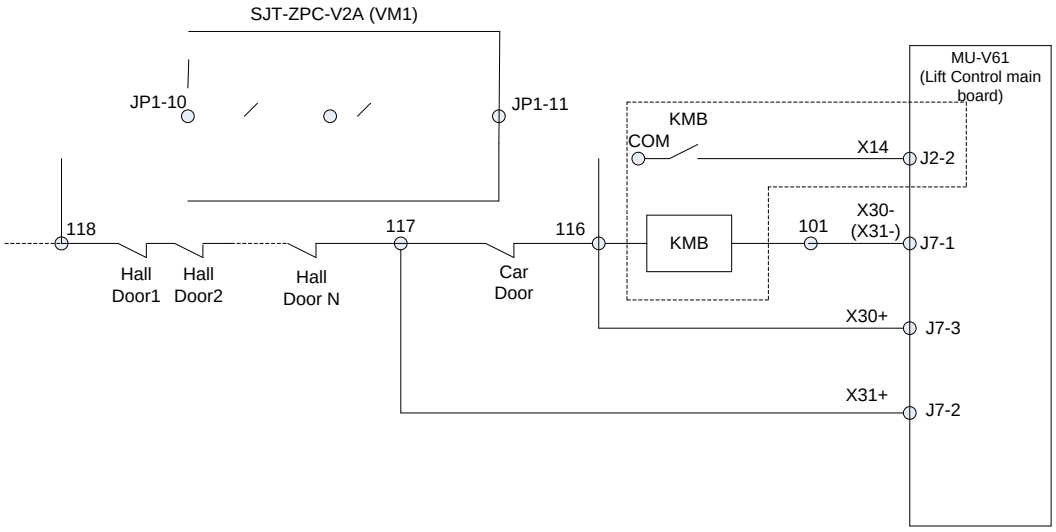

Figure 4 Advance door open & re-leveling & UCMP test & Door short detection control when single door (suit for gearless and geared machine)

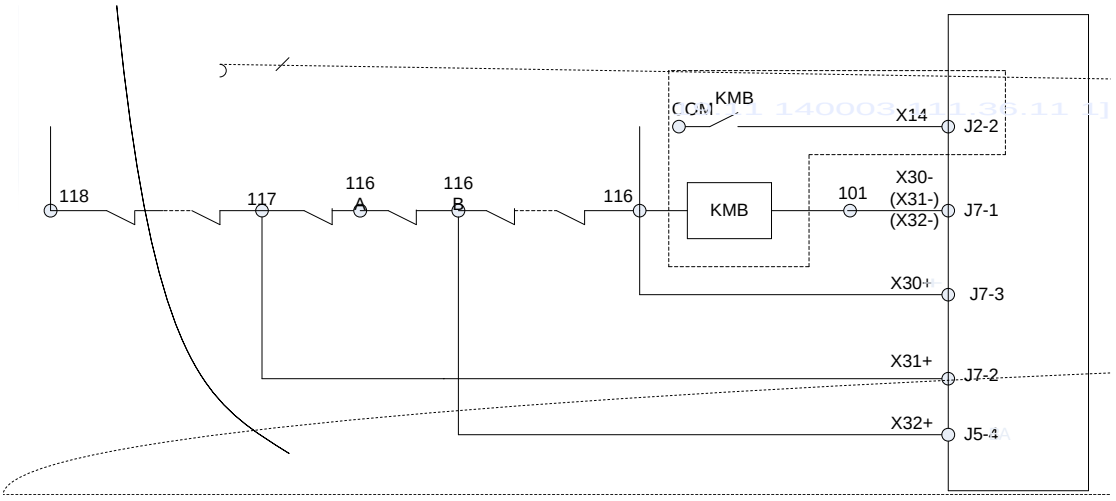

Figure 5 Advance door open & re-leveling & UCMP test & Door short detection control when two

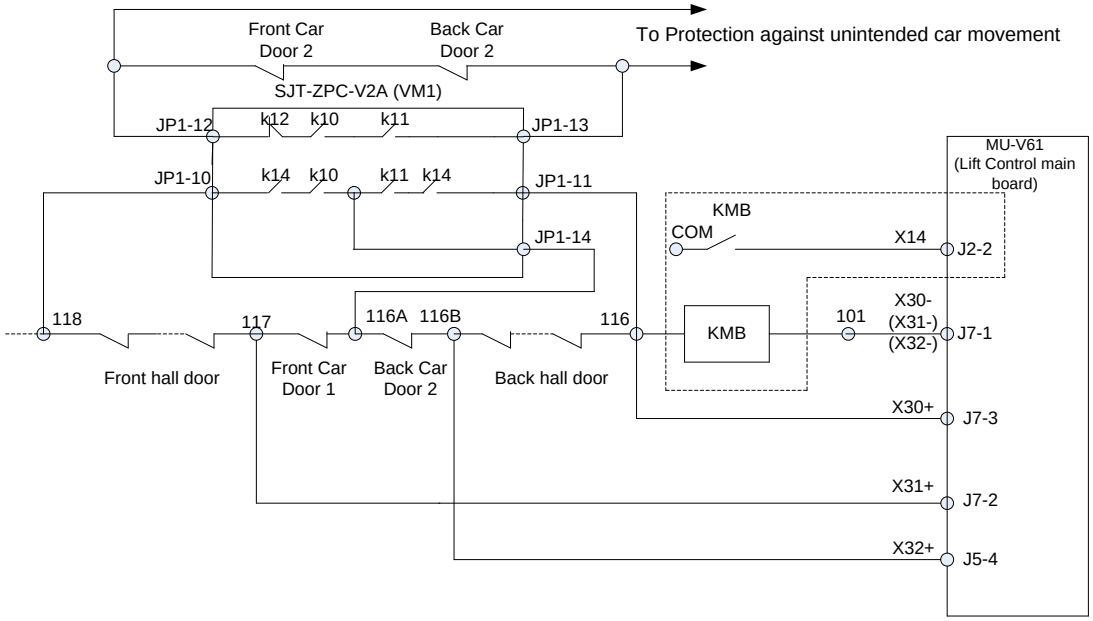

Figure 6 Advance door open & re-leveling & UCMP test & Door short detection control when two door (suit for geared machine)

3.6 Installation of Sensor

When using re-leveling or advance open door function, two re-leveling door zone sensors need to be installed. mq1: up door zone; mq2: down door zone; sl1: up re-leveling door zone, sl2: down re-leveling door zone (require magnetic sensor); each door zone sensor should be installed in sequence, otherwise re-leveling may run to opposite direction.

Note:

1. Installation distance requirement of S1. The distance of S1- should be more than 45mm and less than 160mm If distance of S1 is over 160mm, it will affect brake distance of UCMP.

26[brake)0)]La3.8 2644CID 14Lang (en-US)>> BDC BTT1 0 0 1 101The distanc re

3.7 Function description

3.7.1 Advance open door

While elevator arrives at destination floor and decelerates to the speed below International standard EN81 regulation, re-leveling board detect up and down re-leveling door zone signals and cooperate with elevator control board to short door circuit. Then operate open door within safety unlocking zone while low speed running. After stop brake of traction machine has turned off, so it will release door circuit short after car keep static. Time sequence is shown as follow:

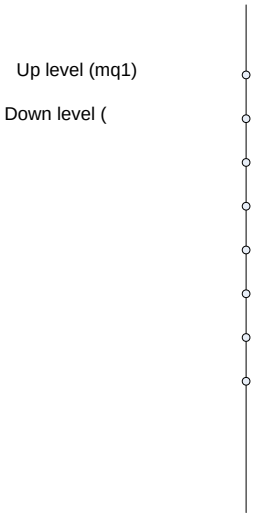

Figure 8 Advance open door time sequence while up running

1: Enter up level sensor; 2: Enter up re-leveling sensor; 3: Enter safety unlocking zone; 4: Control system find safety zone and speed is lower than set value, then output door circuit short control; 5: Door circuit short complete; 6: Control system find all condition satisfied; 6: Control system operate open door in low speed; 7: Stop complete and release door circuit short.

3.7.2 Re-leveling

When elevator stops at unlocking zone, car may deviate from level position because of rope telescopic change by car load vibration or some other reasons. Below the speed in International --in

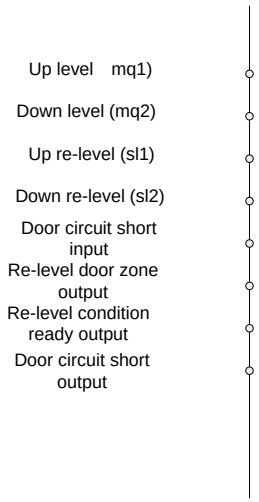

Figure 9 Re-leveling time sequence while up running

1: Control system find car deviate from level zone but still is in safety unlocking zone, then output door circuit short command; 2: Door circuit short complete, system start to run; 3: Elevator run back to level position in low speed; 4: Stop complete, release door circuit short.

3.7.3 Unintended Car movement detection with door opened

When elevator stop at level zone and hall door open with car door, this device parallel connect to door circuit and detect up & down re-leveling door zone signals. If car unintended move out of safety unlocking zone with car door or hall door opened, UCMP output will cut off and trigger brake subsystem to make car stop and hold it still. The time sequence is shown as follow:

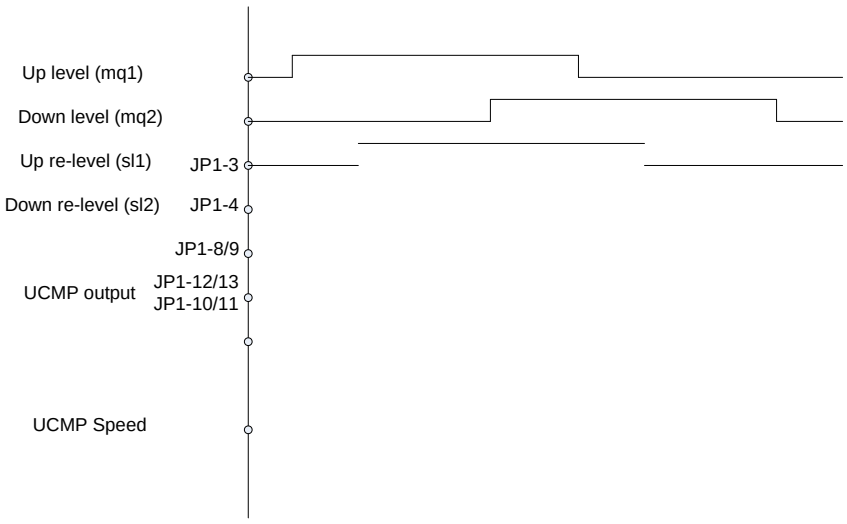

Figure 10 UCMP time sequence

SJT-ZPC-

Chart 3 Regular Check (Regular check period is 30 days for this system) (Cont'd)

Component	Terms for check	Judgment standard